Rope Drum Configuration

Customer specifications

- Drive: _____
- Travel high: _____
- Reserve: _____
- No. of ropes: _____
- Ø ropes: _____
- Suspensions: _____

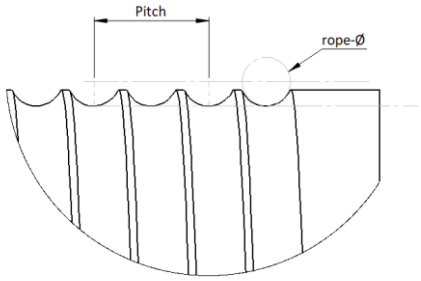

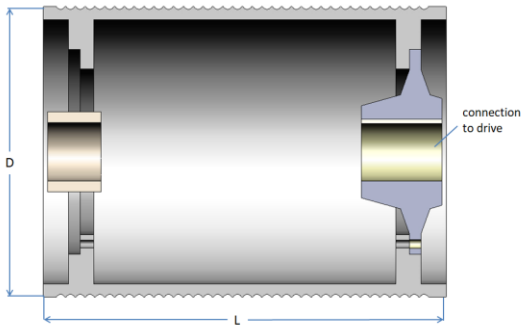

Execution:

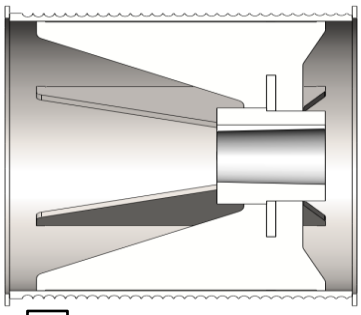

☐ one-side connection

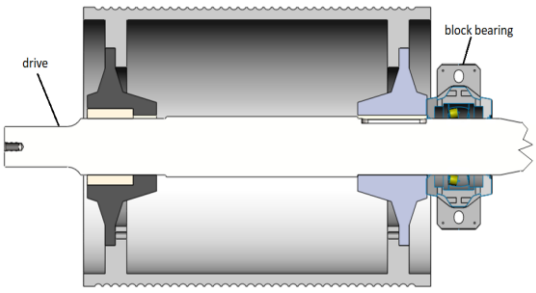

☐ with shaft / outer bearing

Calculation: